SERVING THE FOOD INDUSTRY SINCE 1951

# Stainless Steel Worktables with Leg Brace and Open Base

ITEM: **28628 28629 28630 28631 28632 28633 28634 28635**

## An open-base stainless steel worktable that leaves room for equipment, bins or carts underneath.

The flat top is 18 gauge 430 stainless steel. Instead of an undershelf, the base uses a galvanized U-shape leg brace with aluminum sockets, with an 18 gauge galvanized hat channel and galvanized legs and sockets. Plastic bullet feet level the table.

- **18 gauge 430 stainless steel flat top**
- **Open base, no undershelf**
- **Galvanized U-shape leg brace**
- **Aluminum brace sockets**
- **Galvanized legs and sockets**
- **Plastic bullet feet**
- **NSF certified**



**28628** 24″ x 24″



**28632** 24″ x 60″



**28635** 30″ x 72″

## AT A GLANCE

| | |
|---|---|
| **Material** | 18 gauge 430 stainless steel top; 18 gauge galvanized hat channel, legs, sockets and U-shape leg brace (aluminum sockets); plastic bullet feet |
| **Available Sizes (D x W)** | 24″ deep: 24″, 30″, 36″, 48″, 60″ wide<br>30″ deep: 48″, 60″, 72″ wide |
| **Working Height** | 34″ (864 mm) |
| **Certification** | NSF |
| **Warranty** | 180 Days Limited |

Telephone: 1-800-465-0234 Fax: (905) 607-0234 Email: sales@omcan.com Website: www.omcan.com

AUTHORIZED DEALER

NSF Certified

180 Days Limited Warranty

## MODELS AND CAPACITIES

| Item | Size (D x W) | Legs | Load Capacity | Leg Brace |
|---|---|---|---|---|
| **24" DEPTH** | | | | |
| **28628** | 24" x 24" (610 x 610 mm) | 4 | 400 lb (181.4 kg) | – |
| **28629** | 24" x 30" (610 x 762 mm) | 4 | 450 lb (204.1 kg) | – |
| **28630** | 24" x 36" (610 x 914 mm) | 4 | 500 lb (226.8 kg) | – |
| **28631** | 24" x 48" (610 x 1219 mm) | 4 | 600 lb (272.2 kg) | 38035 |
| **28632** | 24" x 60" (610 x 1524 mm) | 4 | 700 lb (317.5 kg) | 38036 |
| **30" DEPTH** | | | | |
| **28633** | 30" x 48" (762 x 1219 mm) | 4 | 700 lb (317.5 kg) | 39384 |
| **28634** | 30" x 60" (762 x 1524 mm) | 4 | 800 lb (362.9 kg) | 39385 |
| **28635** | 30" x 72" (762 x 1829 mm) | 4 | 900 lb (408.2 kg) | 39386 |

## OPTIONAL ACCESSORIES

Galvanized leg braces are listed by item in the table above.

**23988** 48" 18 Gauge 430 Stainless Steel Double Deck Overshelf

**47599** 5" Caster (without Brake) for Worktables, Equipment Stands and Steam Tables

**23989** 60" 18 Gauge 430 Stainless Steel Double Deck Overshelf

**23990** 72" 18 Gauge 430 Stainless Steel Double Deck Overshelf

**23520** Adjustable Bullet Foot for Worktable -Plastic Inside and Stainless Steel Outside

**24579** Drawer for 30" Worktables

**39313** Stainless Steel Bullet Foot for Worktable

**44616** 48" 18 Gauge 430 Stainless Steel Single Deck Overshelf

**14395** 5" Caster with Brake for Worktables, Equipment Stands and Steam Tables

**44617** 60" 18 Gauge 430 Stainless Steel Single Deck Overshelf

**44618** 72" 18 Gauge 430 Stainless Steel Single Deck Overshelf

**24578** Drawer for 24" Worktables

**23510** Plastic Bullet Foot for Worktable

## 28628 | 24″ X 24″ STAINLESS STEEL WORKTABLE WITH LEG BRACE AND OPEN BASE

| ITEM | SIZE (D X W) | WORKING HEIGHT | LEGS | LOAD CAPACITY |
|---|---|---|---|---|
| **28628** | 24″ x 24″<br>(610 x 610 mm) | 34″<br>(864 mm) | 4 | 400 lb<br>(181.4 kg) |

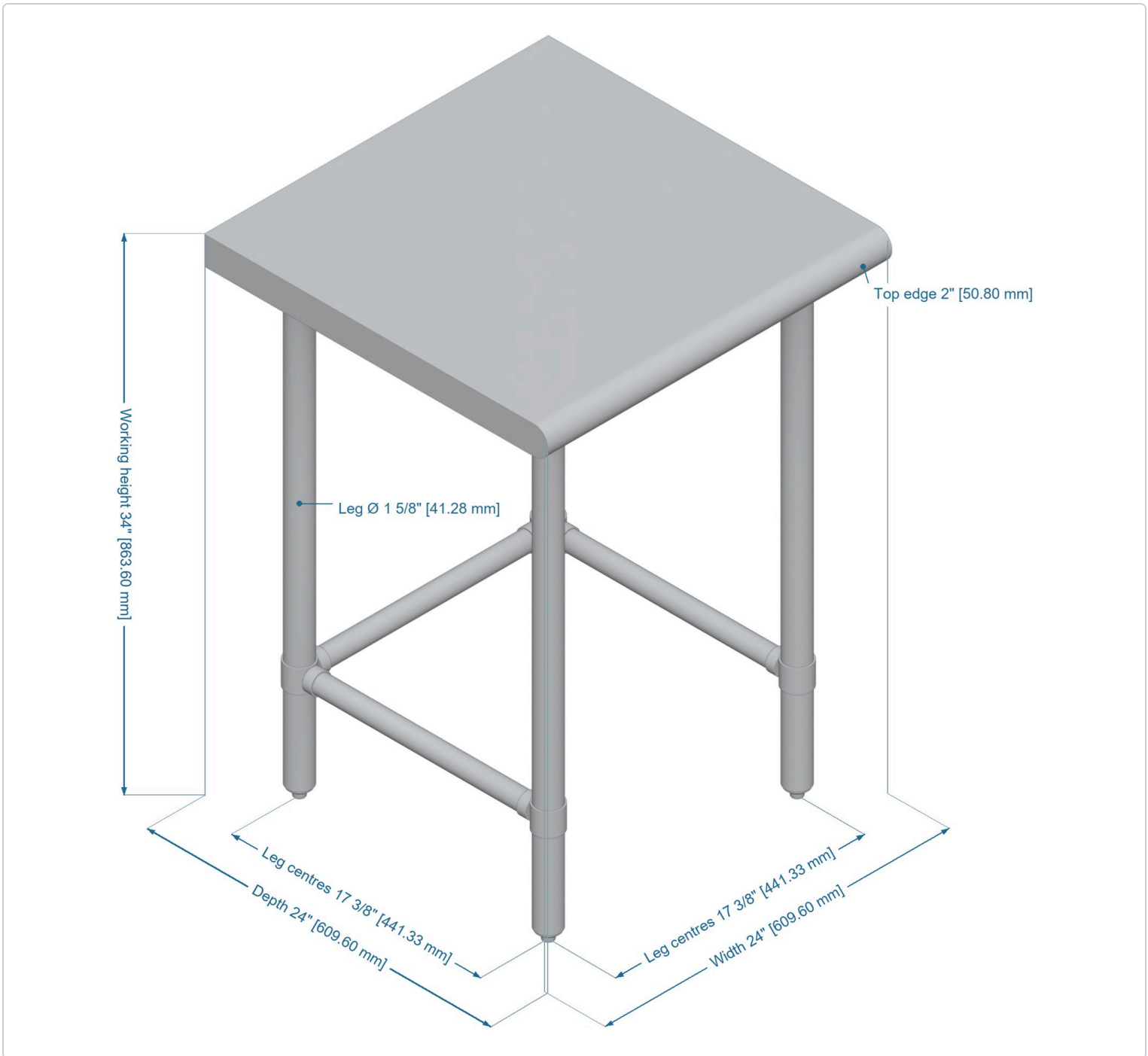


Dimensions in inches (millimetres). Use the printed dimensions, not measurements taken from the drawing. Unlabelled hardware, shelf and brace settings, and finish are illustrative.

## 28629 | 24″ X 30″ STAINLESS STEEL WORKTABLE WITH LEG BRACE AND OPEN BASE

| ITEM | SIZE (D X W) | WORKING HEIGHT | LEGS | LOAD CAPACITY |
|---|---|---|---|---|
| **28629** | 24″ x 30″<br>(610 x 762 mm) | 34″<br>(864 mm) | 4 | 450 lb<br>(204.1 kg) |

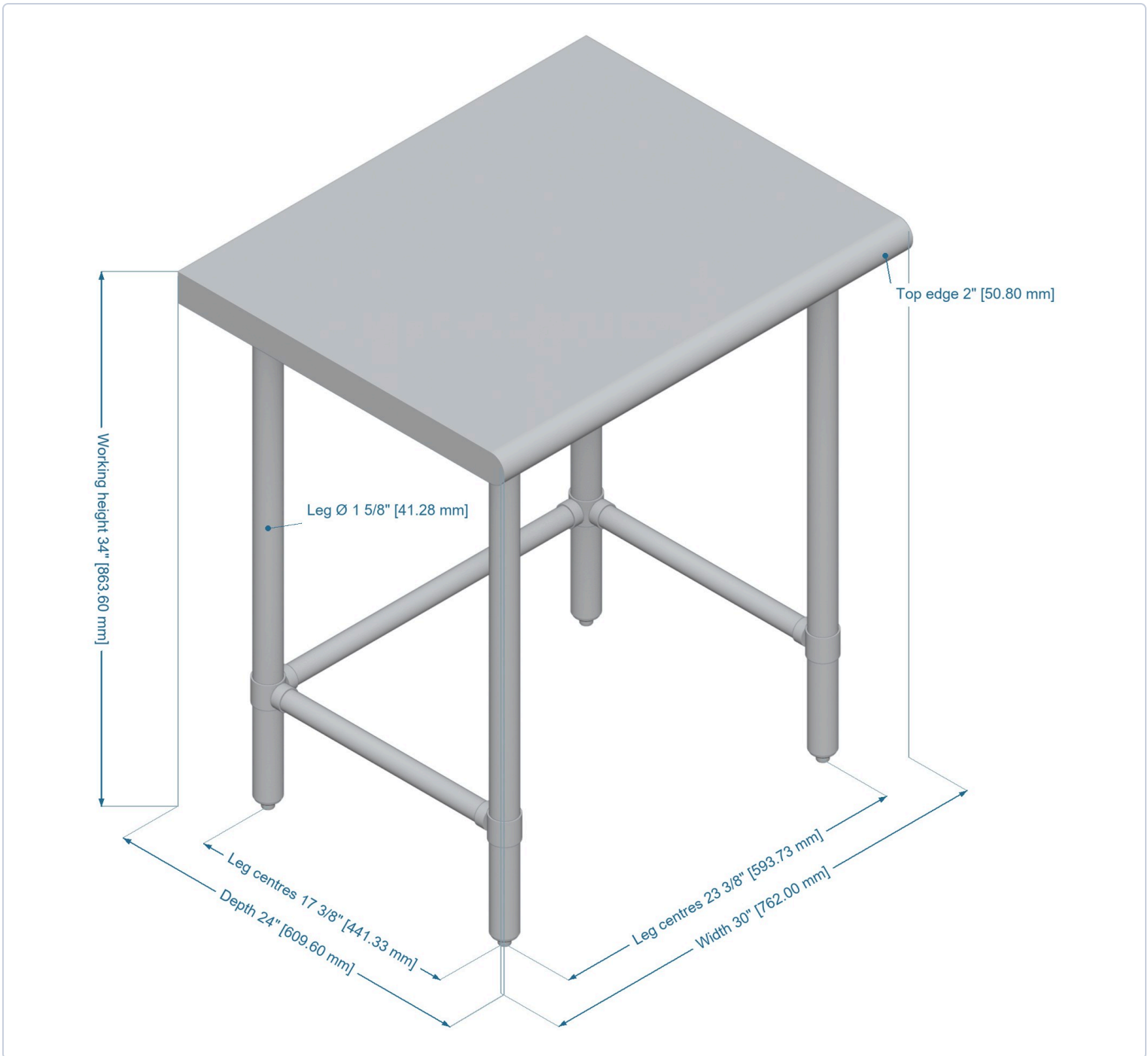


Dimensions in inches (millimetres). Use the printed dimensions, not measurements taken from the drawing. Unlabelled hardware, shelf and brace settings, and finish are illustrative.

## 28630 | 24″ X 36″ STAINLESS STEEL WORKTABLE WITH LEG BRACE AND OPEN BASE

| ITEM | SIZE (D X W) | WORKING HEIGHT | LEGS | LOAD CAPACITY |
|---|---|---|---|---|
| **28630** | 24″ x 36″<br>(610 x 914 mm) | 34″<br>(864 mm) | 4 | 500 lb<br>(226.8 kg) |

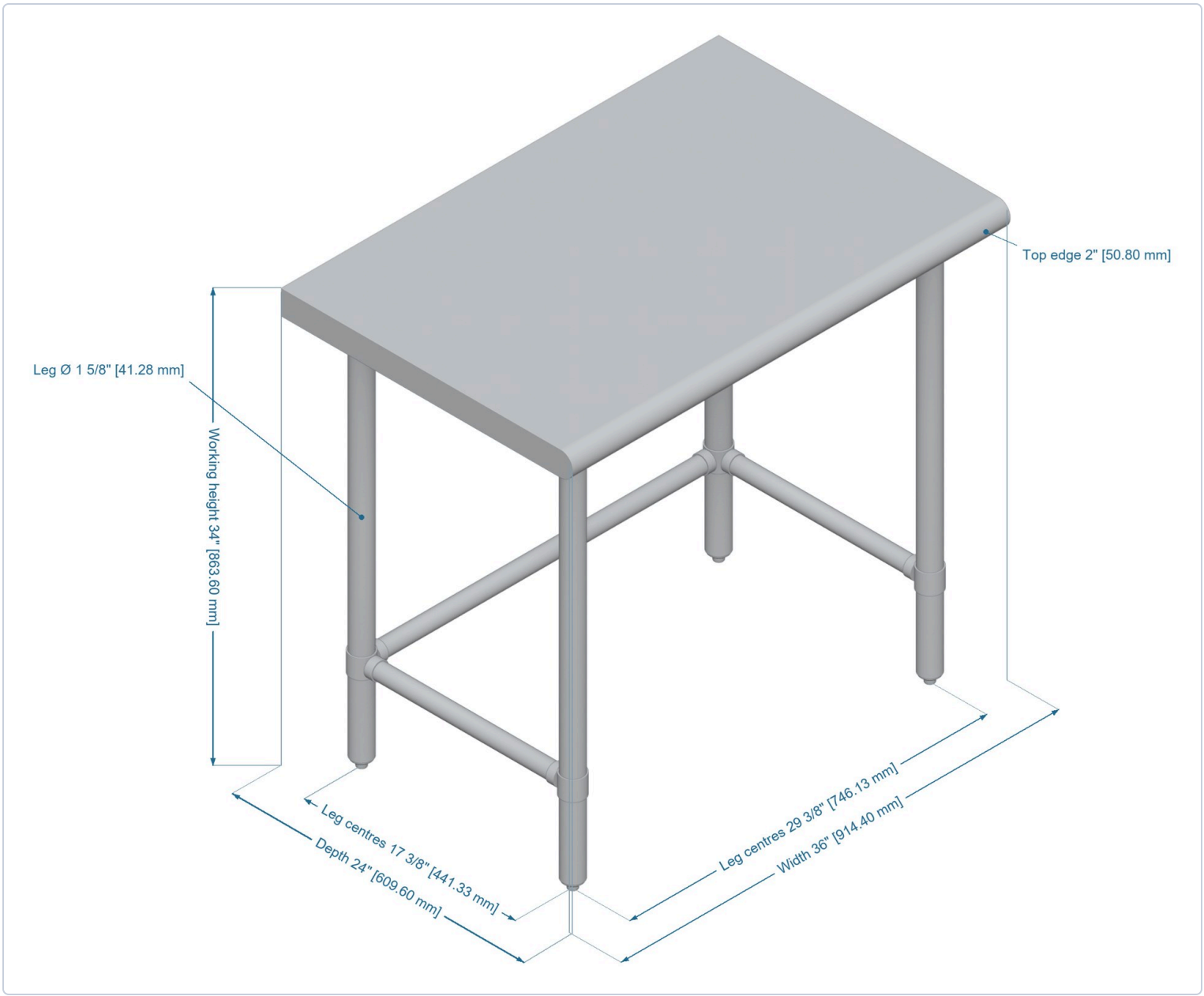


Dimensions in inches (millimetres). Use the printed dimensions, not measurements taken from the drawing. Unlabelled hardware, shelf and brace settings, and finish are illustrative.

## 28631 | 24″ X 48″ STAINLESS STEEL WORKTABLE WITH LEG BRACE AND OPEN BASE

| ITEM | SIZE (D X W) | WORKING HEIGHT | LEGS | LOAD CAPACITY |
|---|---|---|---|---|
| **28631** | 24″ x 48″<br>(610 x 1219 mm) | 34″<br>(864 mm) | 4 | 600 lb<br>(272.2 kg) |

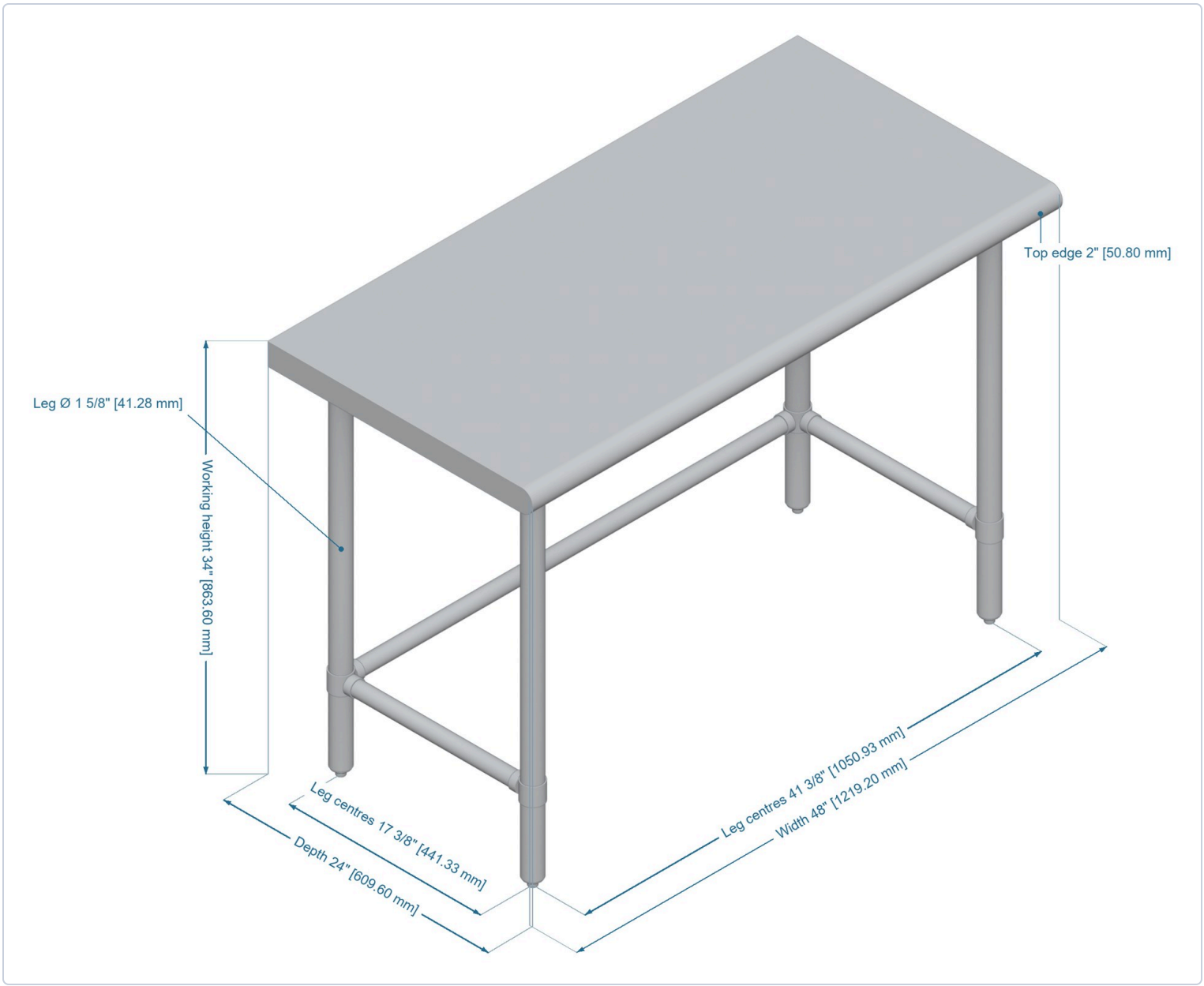


Dimensions in inches (millimetres). Use the printed dimensions, not measurements taken from the drawing. Unlabelled hardware, shelf and brace settings, and finish are illustrative.

## 28632 | 24″ X 60″ STAINLESS STEEL WORKTABLE WITH LEG BRACE AND OPEN BASE

| ITEM | SIZE (D X W) | WORKING HEIGHT | LEGS | LOAD CAPACITY |
|---|---|---|---|---|
| **28632** | 24″ x 60″<br>(610 x 1524 mm) | 34″<br>(864 mm) | 4 | 700 lb<br>(317.5 kg) |

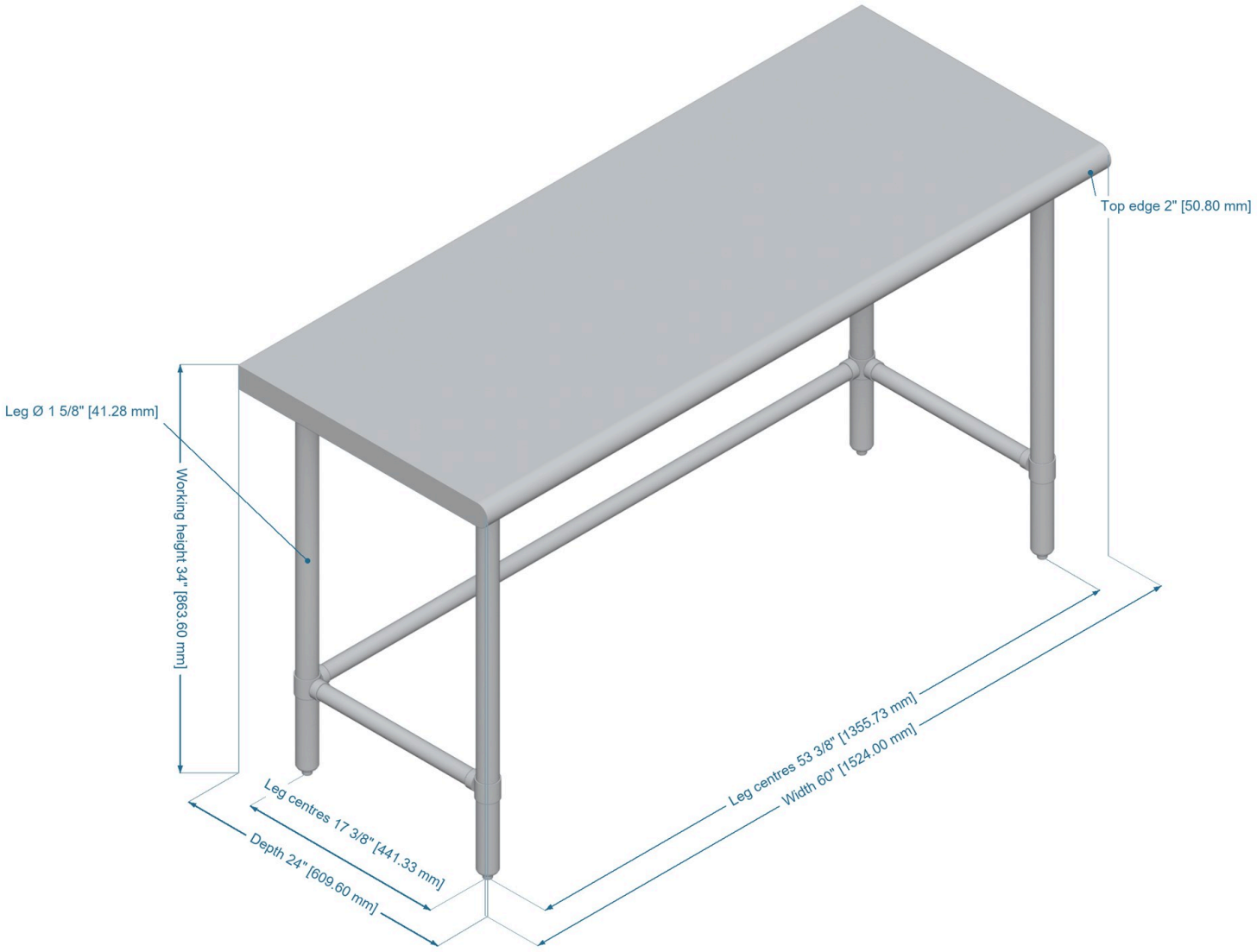


Dimensions in inches (millimetres). Use the printed dimensions, not measurements taken from the drawing. Unlabelled hardware, shelf and brace settings, and finish are illustrative.

## 28633 | 30″ X 48″ STAINLESS STEEL WORKTABLE WITH LEG BRACE AND OPEN BASE

| ITEM | SIZE (D X W) | WORKING HEIGHT | LEGS | LOAD CAPACITY |
|---|---|---|---|---|
| **28633** | 30″ x 48″<br>(762 x 1219 mm) | 34″<br>(864 mm) | 4 | 700 lb<br>(317.5 kg) |

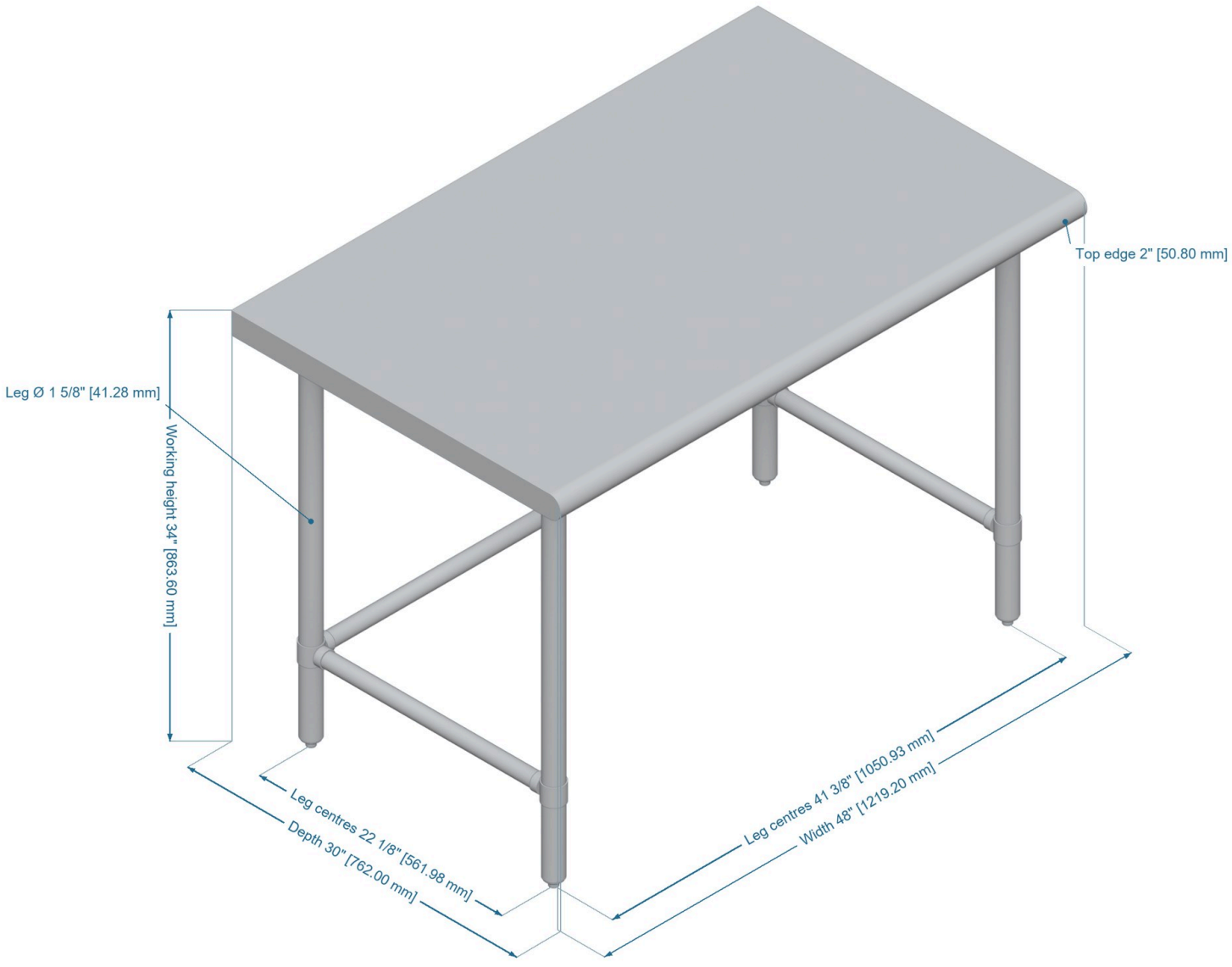


Dimensions in inches (millimetres). Use the printed dimensions, not measurements taken from the drawing. Unlabelled hardware, shelf and brace settings, and finish are illustrative.

## 28634 | 30″ X 60″ STAINLESS STEEL WORKTABLE WITH LEG BRACE AND OPEN BASE

| ITEM | SIZE (D X W) | WORKING HEIGHT | LEGS | LOAD CAPACITY |
|---|---|---|---|---|
| **28634** | 30″ x 60″<br>(762 x 1524 mm) | 34″<br>(864 mm) | 4 | 800 lb<br>(362.9 kg) |

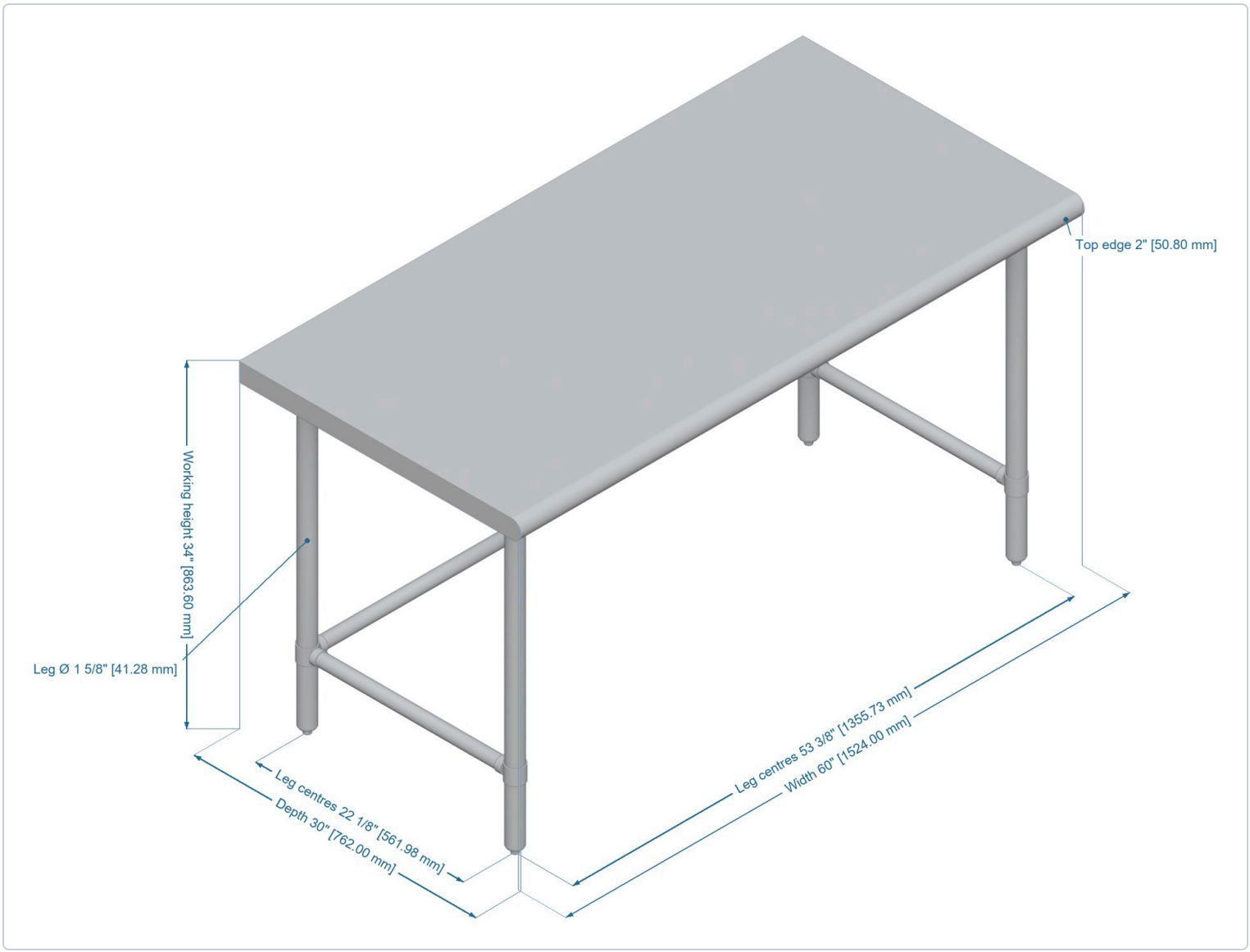


Dimensions in inches (millimetres). Use the printed dimensions, not measurements taken from the drawing. Unlabelled hardware, shelf and brace settings, and finish are illustrative.

## 28635 | 30″ X 72″ STAINLESS STEEL WORKTABLE WITH LEG BRACE AND OPEN BASE

| ITEM | SIZE (D X W) | WORKING HEIGHT | LEGS | LOAD CAPACITY |
|---|---|---|---|---|
| **28635** | 30″ x 72″<br>(762 x 1829 mm) | 34″<br>(864 mm) | 4 | 900 lb<br>(408.2 kg) |

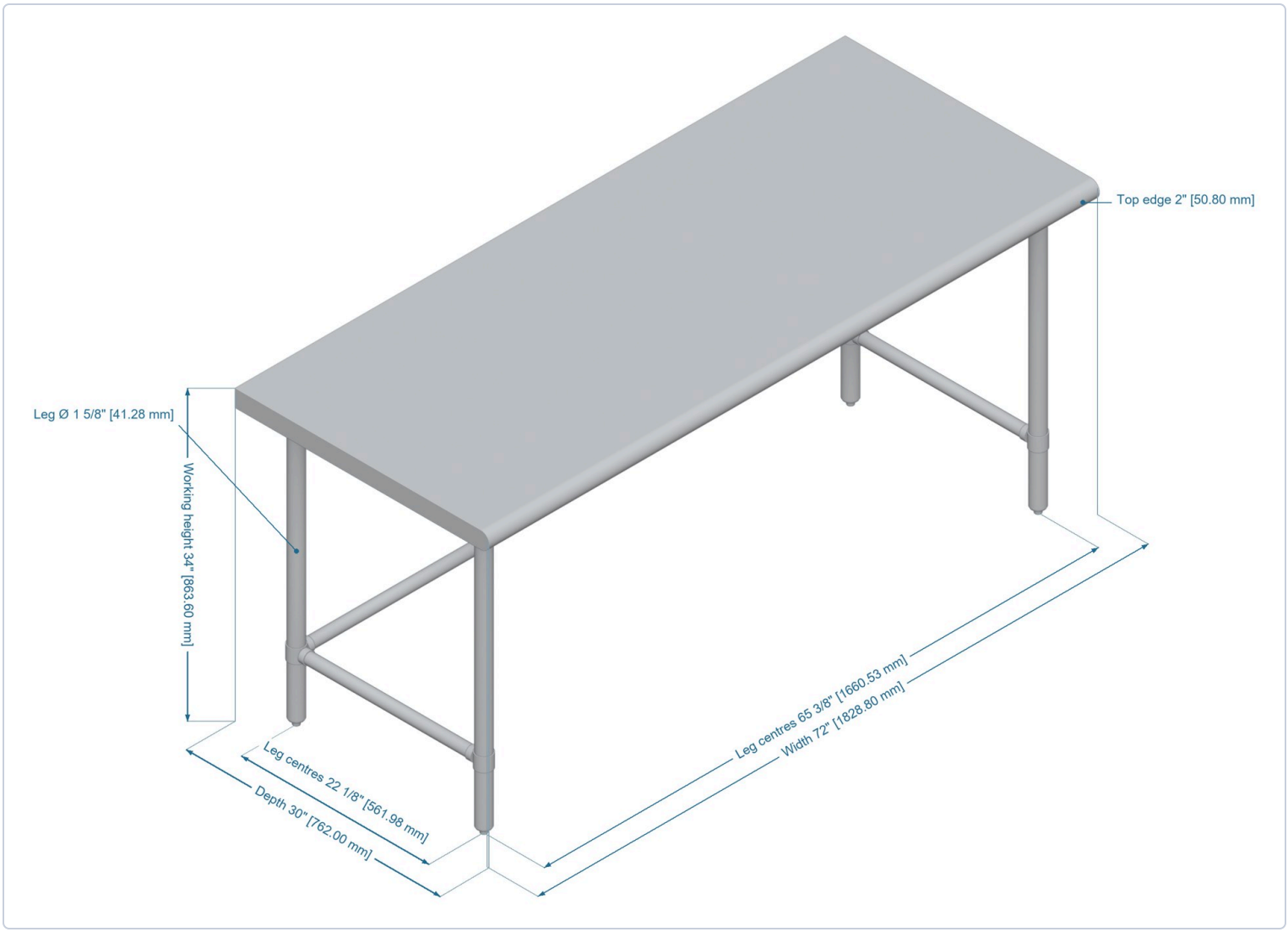


Dimensions in inches (millimetres). Use the printed dimensions, not measurements taken from the drawing. Unlabelled hardware, shelf and brace settings, and finish are illustrative.